PARTS LIST			
ITEM	PART #	DESCRIPTION	NOTES
1	1125	Series 2 Frameless Body	Top & Bottom
2	1125	Series 2 Frameless Body	Sides
3	5331	Series 2 Frameless Body Corner Angle	
4		Aluminum Face	Routers off Flush to the Body - By Other

Ship To:
Sales Order #

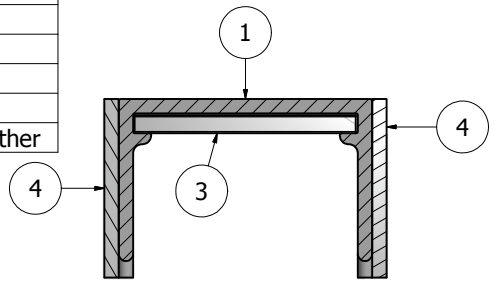

CROSS-SECTION VIEW

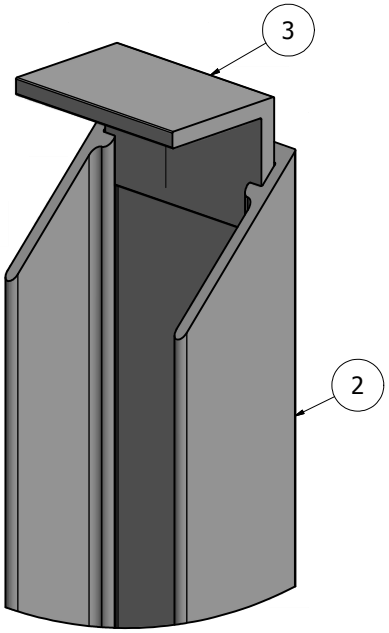

DETAIL A

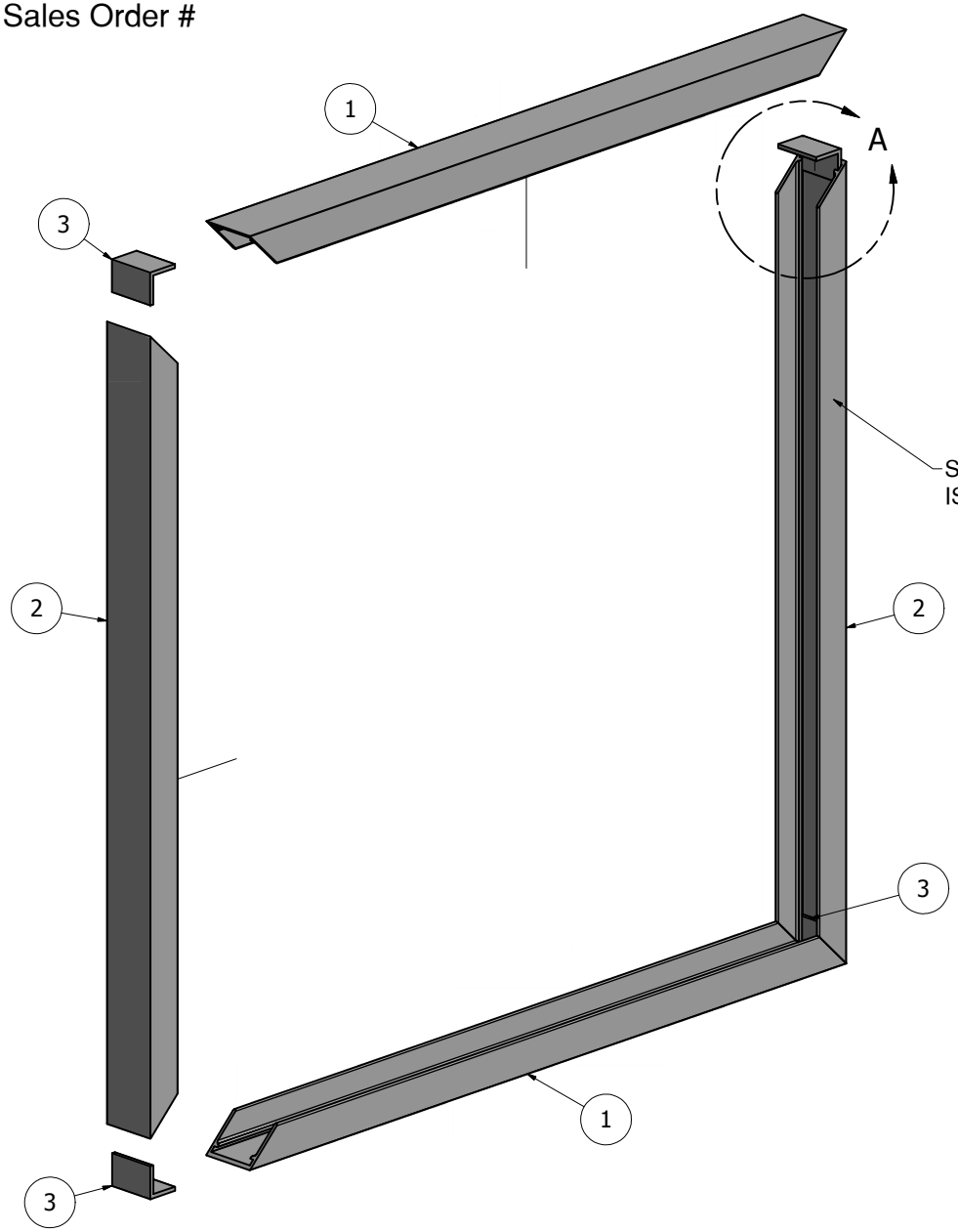

SURFACE THAT FACE
IS BONDED TO.

NOTE: THE BODY ANGLES ARE DESIGNED TO BE BONDED OR WELDED TO THE BODY.

NOTE: PRE-CUT KITS ARE NOT PRE-DRILLED.
(Holes shown in this drawing are for reference only.
Drilling of pilot holes are to be done by fabricator.)

THIS DRAWING WAS CREATED AT NO CHARGE TO ASSIST YOU IN VISUALIZING OUR PROPOSAL. THE DRAWING HEREIN IS THE PROPERTY OF SIGNCOMP. PERMISSION TO COPY OR REVISE THIS DRAWING OR TO USE THIS DRAWING FOR PRODUCTION IS STRICTLY PROHIBITED AND CAN ONLY BE COPIED, REVISED OR USED FOR PRODUCTION WITH THE EXPRESSED WRITTEN PERMISSION OF SIGNCOMP.

DRAWING BY: SBreihof	4/12/2013	SignComp
Centroid X:	0.000 in	TITLE
Centroid Y:	0.000 in	Series 2 Frameless Body Assembly
Principal Moments Ix:	0.000 in^4	
Principal Moments Iy:	0.000 in^4	PART NO 1125 — REV
Section Modulus Ix:	0.000 in^3	
Section Modulus Iy:	0.000 in^3	SHEET 1 OF 1